General Description

Cartridge Style Pilot Operated Check Valve. For additional information see Technical Tips on pages CV1-CV4.

Features

- Hardened, precision ground parts for durability
- Internal pilot position simplifies manifold design
- All external parts zinc plated

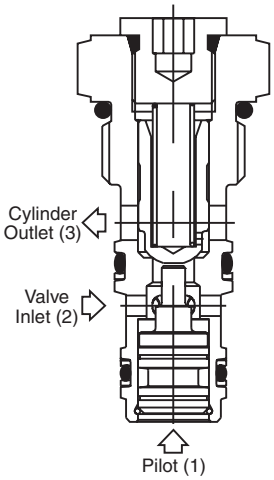

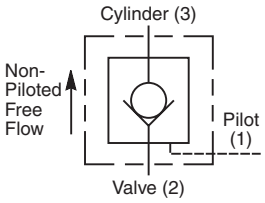

Performance Curve

Pressure Drop vs. Flow (Through cartridge only)

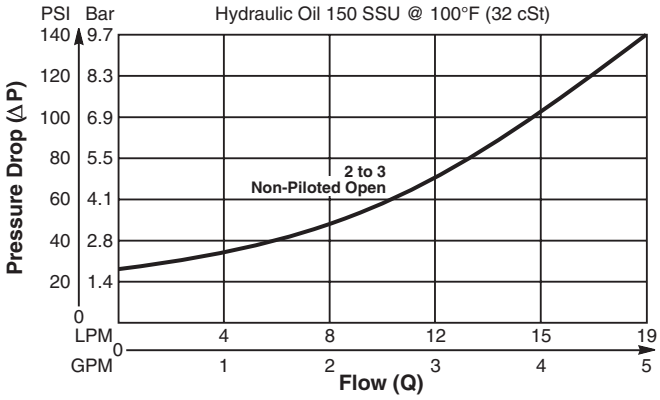

Dimensions Millimeters (Inches)

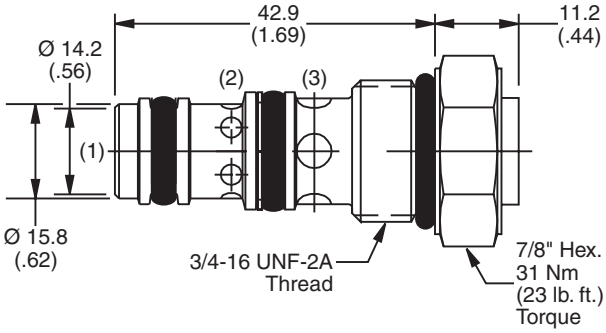

Specifications

Rated Flow	19 LPM (5 GPM)
Maximum Inlet Pressure	207 Bar (3000 PSI)
Leakage at 150 SSU (32 cSt)	5 drops/min. (.33 cc/min.) at 207 Bar (3000 PSI)
Pilot Ratio	3:1
Cartridge Material	All parts steel. All operating parts hardened steel.
Operating Temp. Range/Seals	-40°C to +93.3°C (Nitrile) (-40°F to +200°F) -31.7°C to +121.1°C (Fluorocarbon) (-25°F to +250°F)
Fluid Compatibility/ Viscosity	Mineral-based or synthetic with lubricating properties at viscosities of 45 to 2000 SSU (6 to 420 cSt)
Filtration	ISO code 16/13, SAE Class 4 or better
Approx. Weight	.05 kg (.11 lbs.)
Cavity	C08-3 (See BC Section for more details)
Form Tool	Rougher NFT08-3R Finisher NFT08-3F

Ordering Information

CP084P			—		
08 Size P.O. Check Valve	Cracking Pressure	Seals		Body Material	Port Size

Code	Cracking Pressure
Omit	1.7 Bar (25 PSI)
85	5.9 Bar (85 PSI)

Code	Body Material
Omit	Steel
A	Aluminum

Code	Seals / Kit No.
Omit	Nitrile / (SK08-3N)
V	Fluorocarbon / (SK08-3V)

Code	Port Size	Body Part No.
Omit	Cartridge Only	
4P	1/4″ NPTF	(B08-3-*4P)
4T	SAE-4	(B08-3-*4T)
6T	SAE-6	(B08-3-*6T)
6B	3/8″ BSPG	(B08-3-*6B)

** Add "A" for aluminum, omit for steel.*

General Description

Cartridge Style Pilot Operated Check Valve. For additional information see Technical Tips on pages CV1-CV4.

Features

- Hardened, precision ground parts for durability
- Internal pilot position simplifies manifold design
- All external parts have yellow zinc dichromate. This coating is ideal for salt spray applications.

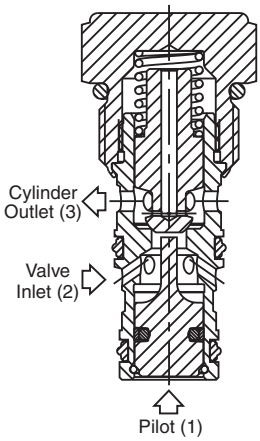

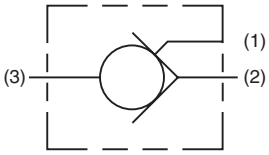

Performance Curve

Pressure Drop vs. Flow (Through cartridge only)

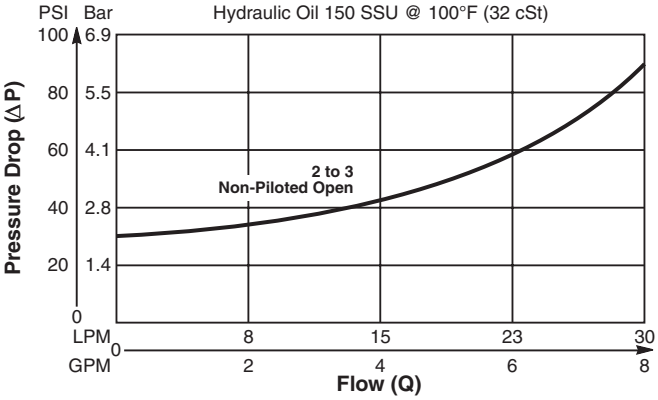

Dimensions Millimeters (Inches)

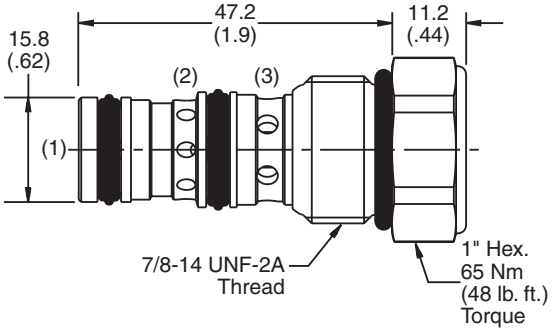

Specifications

Rated Flow	30 LPM (8 GPM)
Maximum Inlet Pressure	350 Bar (5000 PSI)
Leakage at 150 SSU (32 cSt)	2 drops/min. (0.13 cc/min.) at 350 Bar (5000 PSI)
Pilot Ratio	4:1
Cartridge Material	All parts steel. All operating parts hardened steel.
Operating Temp. Range/Seals	-45°C to +93.3°C ("D"-Ring) (-50°F to +200°F) -31.7°C to +121.1°C (Fluorocarbon) (-25°F to +250°F)
Fluid Compatibility/ Viscosity	Mineral-based or synthetic with lubricating properties at viscosities of 45 to 2000 SSU (6 to 420 cSt)
Filtration	ISO code 16/13, SAE Class 4 or better
Approx. Weight	.09 kg (0.2 lbs.)
Cavity	C10-3 (See BC Section for more details)
Form Tool	Rougher NFT10-3R Finisher NFT10-3F

Ordering Information

CPH104P			—		
10 Size P.O. Check Valve	Cracking Pressure	Seals		Body Material	Port Size

Code	Cracking Pressure
15	1.0 Bar (15 PSI)
Omit	2.1 Bar (31 PSI)
50	3.5 Bar (50 PSI)

Code	Body Material
Omit	Steel
A	Aluminum

Code	Seals / Kit No.
Omit	"D"-Ring / (SK10-3)
N	Nitrile / (SK10-3N)
V	Fluorocarbon / (SK10-3V)

Code	Port Size	Body Part No.
Omit	Cartridge Only	
4P	1/4″ NPTF	(B10-3-*4P)
6P	3/8″ NPTF	(B10-3-*6P)
8P	1/2″ NPTF	(B10-3-*8P)
6T	SAE-6	(B10-3-*6T)
8T	SAE-8	(B10-3-*8T)
6B	3/8″ BSPG	(B10-3-6B)†
8B	1/2″ BSPG	(B10-3-*8B)

** Add "A" for aluminum, omit for steel.*
† Steel body only.

General Description

Cartridge Style Pilot Operated Check Valve. For additional information see Technical Tips on pages CV1-CV4.

Features

- Hardened, precision ground parts for durability
- Internal pilot position simplifies manifold design
- All external parts have yellow zinc dichromate. This coating is ideal for salt spray applications.

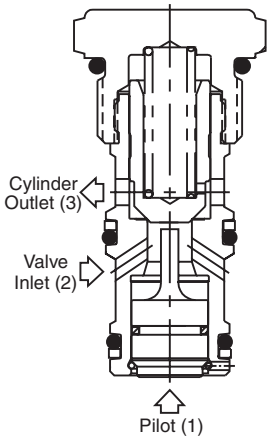

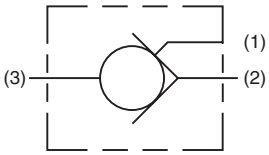

Performance Curve

Pressure Drop vs. Flow (Through cartridge only)

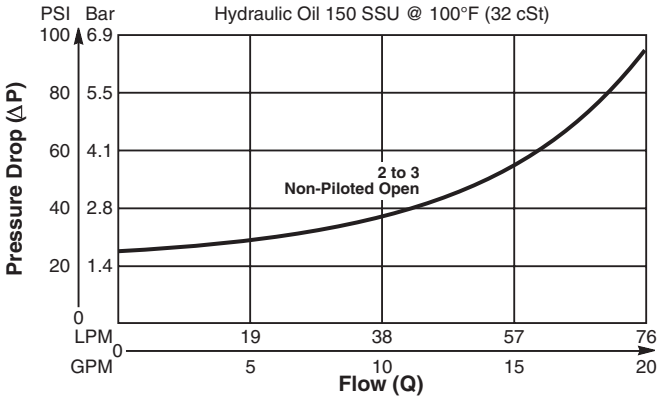

Dimensions Millimeters (Inches)

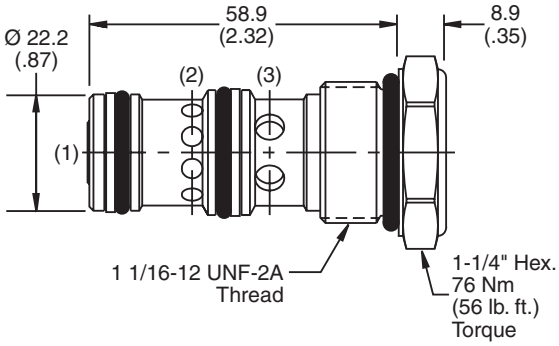

Specifications

Rated Flow	75 LPM (20 GPM)
Maximum Inlet Pressure	350 Bar (5000 PSI)
Leakage at 150 SSU (32 cSt)	5 drops/min. (.33 cc/min.) at 350 Bar (5000 PSI)
Pilot Ratio	3:1
Cartridge Material	All parts steel. All operating parts hardened steel.
Operating Temp. Range/Seals	-40°C to +93.3°C (Nitrile) (-40°F to +200°F) -31.7°C to +121.1°C (Fluorocarbon) (-25°F to +250°F)
Fluid Compatibility/ Viscosity	Mineral-based or synthetic with lubricating properties at viscosities of 45 to 2000 SSU (6 to 420 cSt)
Filtration	ISO code 16/13, SAE Class 4 or better
Approx. Weight	0.2 kg (.44 lbs.)
Cavity	C12-3 (See BC Section for more details)
Form Tool	Rougher NFT12-3R Finisher NFT12-3F

Ordering Information

CPH124P			—		
12 Size P.O. Check Valve	Cracking Pressure	Seals		Body Material	Port Size

Code	Cracking Pressure
Omit	1.7 Bar (25 PSI)

Code	Body Material
Omit	Steel
A	Aluminum

Code	Seals / Kit No.
Omit	Nitrile / (SK12-3)
V	Fluorocarbon / (SK12-3V)

Code	Port Size	Body Part No.
Omit	Cartridge Only	
8T	SAE-8	(B12-3-*8T)
12T	SAE-12	(B12-3-*12T)
8B	1/2″ BSPG	(B12-3-8B)†

** Add "A" for aluminum, omit for steel.*
† Steel body only.

General Description

Pilot Piston Style Pilot Operated Check Valve. For additional information see Technical Tips on pages CV1-CV4.

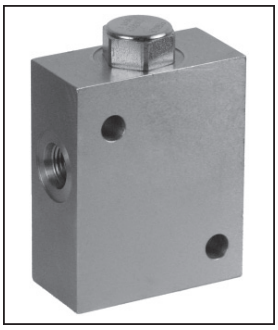

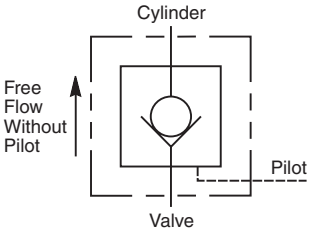

Features

- Spherical poppet for low leakage
- "D"-Ring eliminates back-up rings
- Optional sealed pilot piston

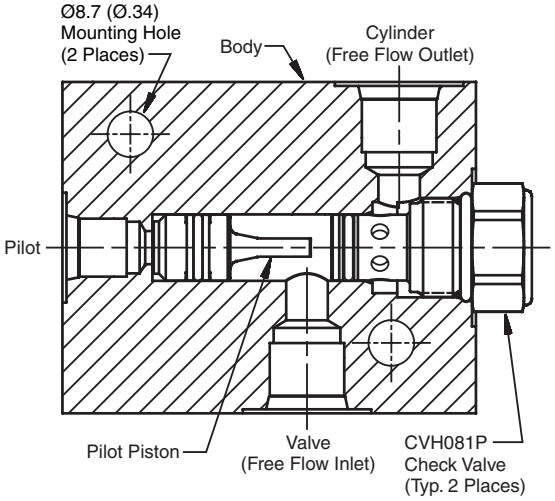

Specifications

Maximum Flow	56 LPM (15 GPM)
Maximum Inlet Pressure	210 Bar (3000 PSI) - CSP081 350 Bar (5000 PSI) - CSPH081
Leakage Across Check 150 SSU (32 cSt)	2 drops/min. (.13 cc/min.)
Leakage Across Pilot Piston (No Seals)	312 cc/min 0.3 LPM (.08 GPM)
Pilot Ratio	4:1
Pilot Piston Part Numbers	No Seal - 718237 Nitrile Seal - 718237N Fluorocarbon Seal - 718237V
Cartridge Material	All parts steel. All operating parts hardened steel.
Body Material	Aluminum - CSP081 Steel - CSPH081
Operating Temp. Range (Ambient)	-45°C to +93.3°C ("D"-Ring) (-50°F to +200°F) -31.7°C to +121.1°C (Fluorocarbon) (-25°F to +250°F)
Filtration	ISO code 16/13, SAE Class 4 or better
Fluids	Mineral-based or synthetic with lubricating properties at viscosities of 45 to 2000 SSU (6 to 420 cSt)
Approx. Weight	

Performance Curve

Pressure Drop vs. Flow (Through cartridge only)

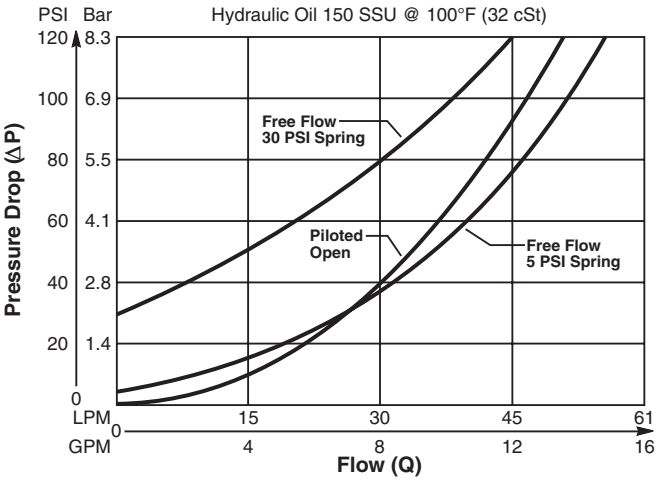

Dimensions Millimeters (Inches)

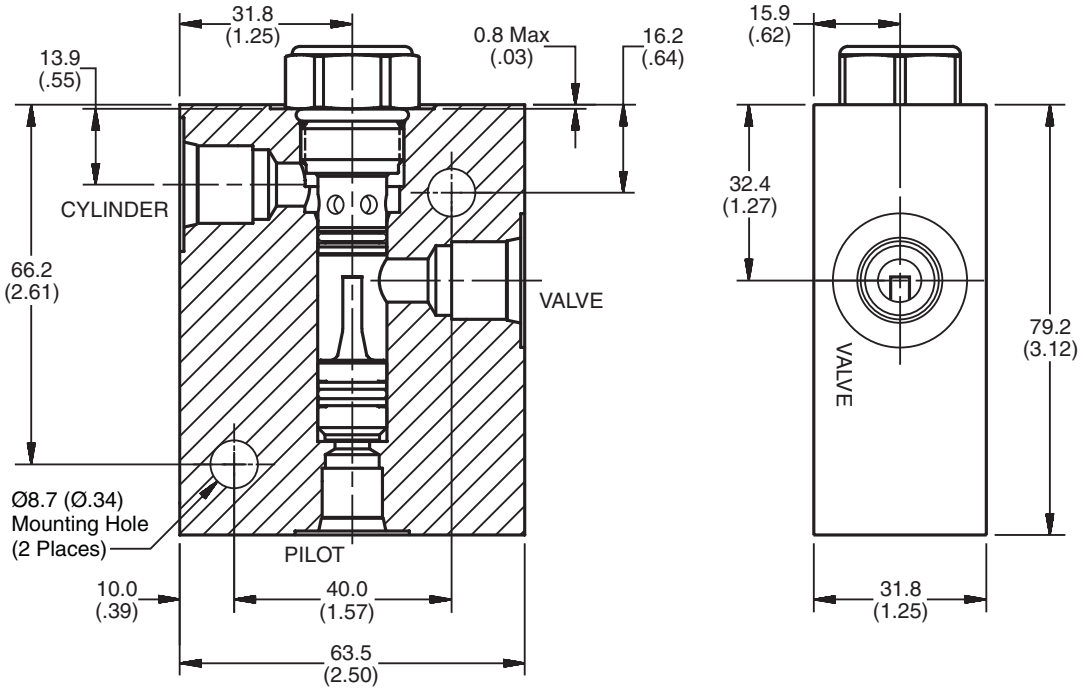

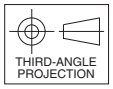

Ordering Information

CSP					—	
8 Size Pilot Piston P.O. Check Valve	Model Description	Piston Type	Cracking Pressure	Seals		Port Size

Code	Model Description
081	3000 PSI Series
H081	5000 PSI Series

Code	Piston Type
P	Pilot Piston without seal
A	Pilot Piston with seal Note: Requires 1.4 Bar (20 PSI) crack minimum.

Code	Cracking Pressure
*Omit	0.3 Bar (5 PSI)
10	0.7 Bar (10 PSI)
30	2.1 Bar (30 PSI)
65	4.5 Bar (65 PSI)
100	6.9 Bar (100 PSI)
150	10.4 Bar (150 PSI)

Not available with "A" option.

Code	Seals / Kit No.
Omit	"D"-Ring / (SK08-2)
N	Nitrile / (SK08-2N)
V	Fluorocarbon / (SK08-2V)

Code	Port Size	Material
Omit	Cartridge Only	
A6T	SAE-6 **(CSP081 Only)**	Aluminum
6T	SAE-6 **(CSPH081 Only)**	Steel

General Description

Pilot Piston Style Pilot Operated Check Valve. For additional information see Technical Tips on pages CV1-CV4.

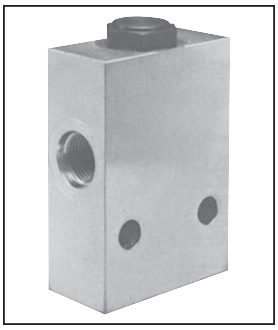

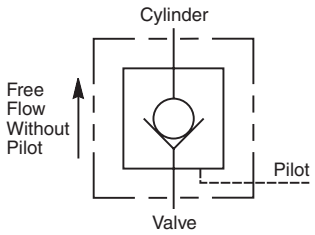

Features

- Spherical poppet for low leakage
- "D"-Ring eliminates back-up rings
- Optional sealed pilot piston
- Steel or aluminum body construction

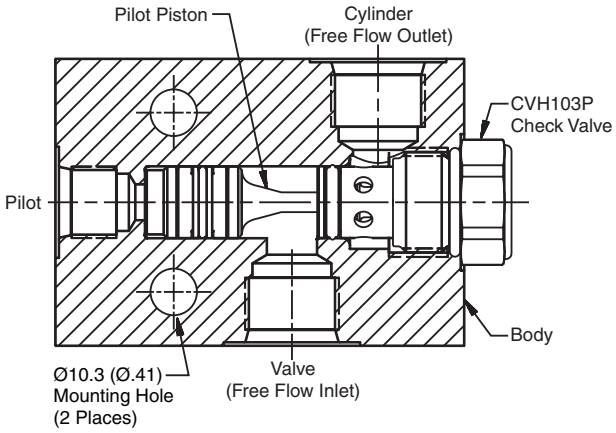

Specifications

Maximum Flow	56 LPM (15 GPM)
Maximum Inlet Pressure	210 Bar (3000 PSI) - CSP103 350 Bar (5000 PSI) - CSPH103
Leakage Across Check 150 SSU (32 cSt)	2 drops/min. (.13 cc/min.)
Leakage Across Pilot Piston (No Seals)	312 cc/min 0.3 LPM (.08 GPM)
Pilot Ratio	4:1
Pilot Piston Part Numbers	No Seal - 717909 Nitrile Seal - 717909N Fluorocarbon Seal - 717909V
Cartridge Material	All parts steel. All operating parts hardened steel.
Body Material	Aluminum - CSP103 Steel - CSPH103
Operating Temp. Range (Ambient)	-45°C to +93.3°C ("D"-Ring) (-50°F to +200°F) -31.7°C to +121.1°C (Fluorocarbon) (-25°F to +250°F)
Filtration	ISO code 16/13, SAE Class 4 or better
Fluids	Mineral-based or synthetic with lubricating properties at viscosities of 45 to 2000 SSU (6 to 420 cSt)
Approx. Weight	

Performance Curve

Pressure Drop vs. Flow (Through cartridge only)

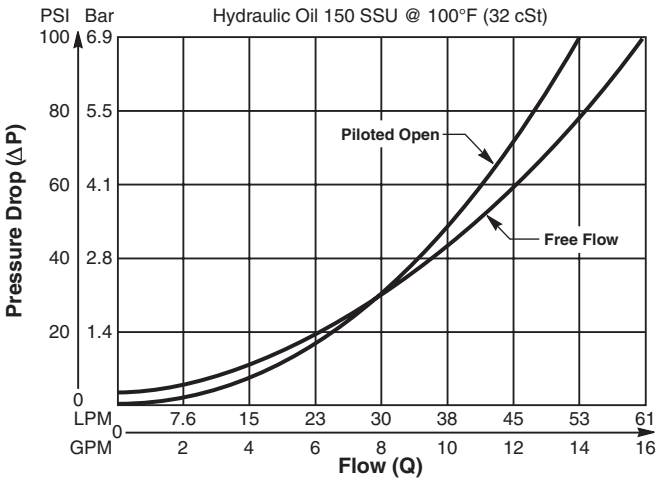

Dimensions Millimeters (Inches)

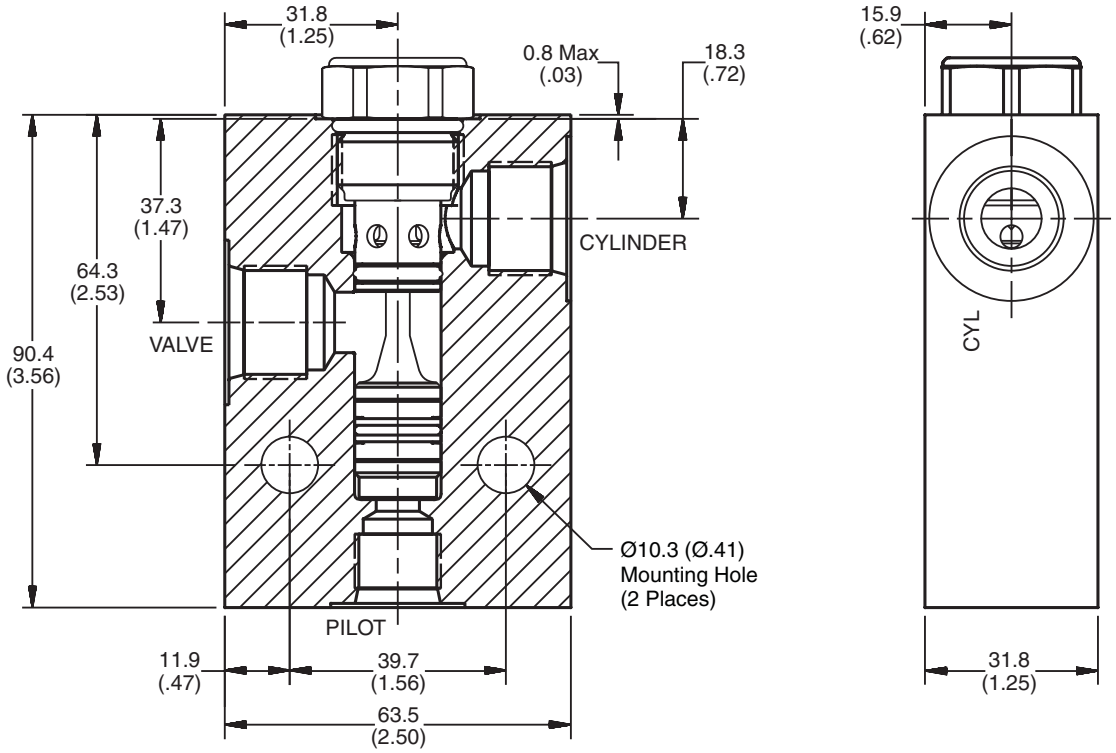

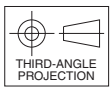

Ordering Information

CSP					—	
10 Size Pilot Piston P.O. Check Valve	Model Description	Piston Type	Cracking Pressure	Seals		Port Size

Code	Model Description
103	3000 PSI Series
H103	5000 PSI Series

Code	Piston Type
P	Pilot Piston without seal
A	Pilot Piston with seal Note: Requires 1.4 Bar (20 PSI) crack minimum.

Code	Cracking Pressure
*Omit	0.3 Bar (5 PSI)
20	1.4 Bar (20 PSI)
50	3.5 Bar (50 PSI)
65	4.5 Bar (65 PSI)
80	5.5 Bar (80 PSI)
100	6.9 Bar (100 PSI)

Not available with "A" option.

Code	Seals / Kit No.
Omit	"D"-Ring / (SK10-2)
N	Nitrile / (SK10-2N)
V	Fluorocarbon / (SK10-2V)

Code	Port Size	Material
Omit	Cartridge Only	
A8T	SAE-8 **(CSP103 Only)**	Aluminum
8T	SAE-8 **(CSPH103 Only)**	Steel

General Description

Pilot Piston Style Pilot Operated Check Valve. For additional information see Technical Tips on pages CV1-CV4.

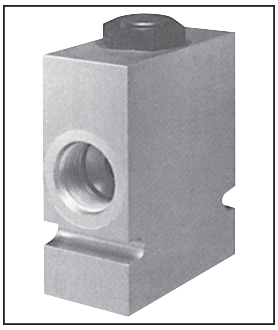

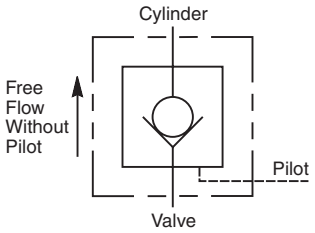

Features

- Hardened precision ground parts for durability
- Optional sealed pilot piston
- Steel or aluminum body construction

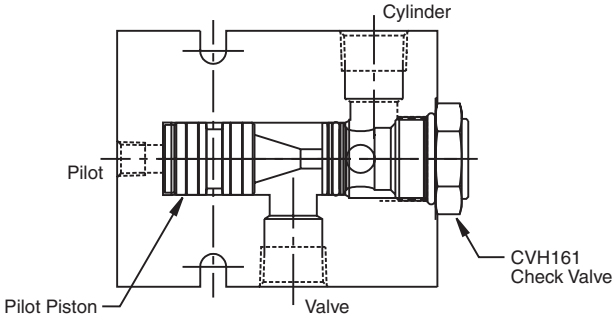

Specifications

Maximum Flow	187 LPM (50 GPM)
Maximum Inlet Pressure	210 Bar (3000 PSI) - CSP161 350 Bar (5000 PSI) - CSPH161
Leakage at 150 SSU (32 cSt)	5 drops/min (.33 cc/min) @ 350 Bar (5000 psi)
Leakage Across Pilot Piston (No Seals)	312 cc/min 0.3 LPM (.08 GPM)
Pilot Ratio	3:1
Pilot Piston Part Numbers	No Seal - 717910 Nitrile Seal - 717910N Fluorocarbon - 717910V
Cartridge Material	All parts steel. All operating parts hardened steel.
Body Material	Aluminum - CSP161 Steel - CSPH161
Operating Temp. Range (Ambient)	-40°C to +93.3°C (Nitrile) (-40°F to +200°F) -31.7°C to +121.1°C (Fluorocarbon) (-25°F to +250°F)
Filtration	ISO code 16/13, SAE Class 4 or better
Fluids	Mineral-based or synthetic with lubricating properties at viscosities of 45 to 2000 SSU (6 to 420 cSt)
Approx. Weight	

Performance Curve

Pressure Drop vs. Flow (Through cartridge only)

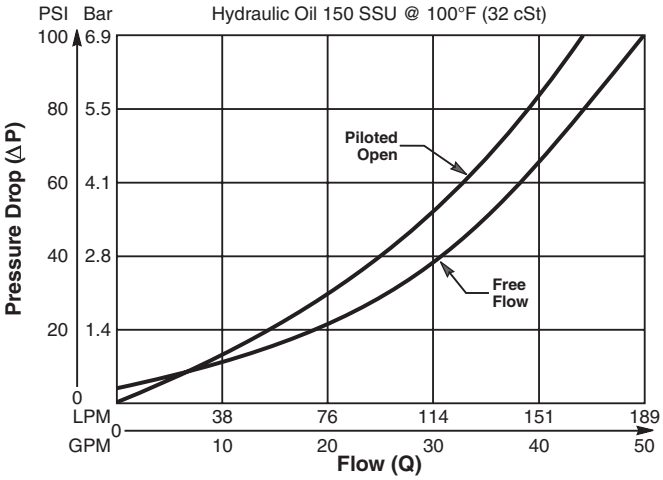

Dimensions Millimeters (Inches)

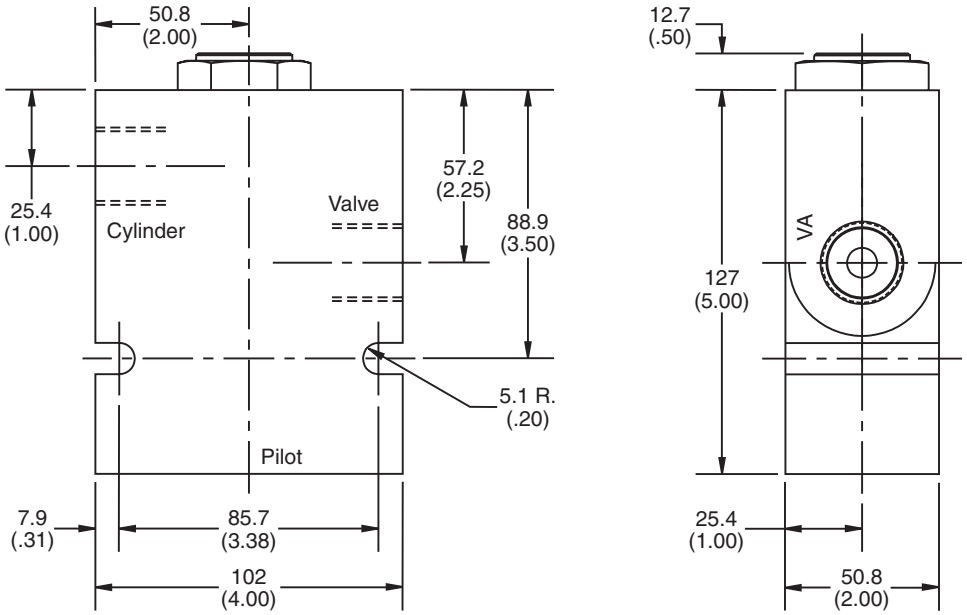

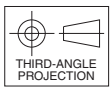

Ordering Information

CSP					—	
16 Size Pilot Piston P.O. Check Valve	Model Description	Piston Type	Cracking Pressure	Seals		Port Size

Code	Model Description
161	3000 PSI Series
H161	5000 PSI Series

Code	Piston Type
P	Pilot Piston without seal
A	Pilot Piston with seal Note: Requires 1.4 Bar (20 PSI) crack minimum.

Code	Cracking Pressure
*Omit	0.3 Bar (5 PSI)
20	1.4 Bar (20 PSI)
65	4.5 Bar (65 PSI)
175	12.1 Bar (175 PSI)

Not available with "A" option.

Code	Seals / Kit No.
Omit	Nitrile / (SK16-2N)
V	Fluorocarbon / (SK16-2V)

Code	Port Size	Material
Omit	Cartridge Only	
A16T	SAE-16 **(CSP161 Only)**	Aluminum
16T	SAE-16 **(CSPH161 Only)**	Steel

General Description

Miniature Pilot to Open, Poppet Type Check Valve. For additional information see Technical Tips on pages CV1-CV4.

Features

- Hardened poppet for maximum durability
- Low leakage - less than 3 drops/min.
- Sealed pilot
- Extremely compact construction - can be fitted directly into most cylinders
- Cavity commonality with load control valves
- Dual line blocks available
- All external parts zinc plated

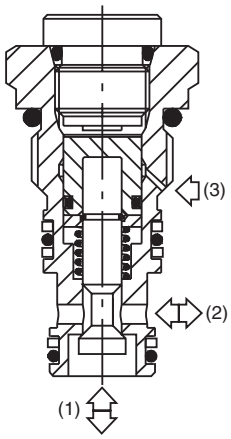

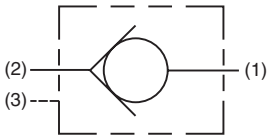

Performance Curve

Pressure Drop vs. Flow (Through cartridge only)

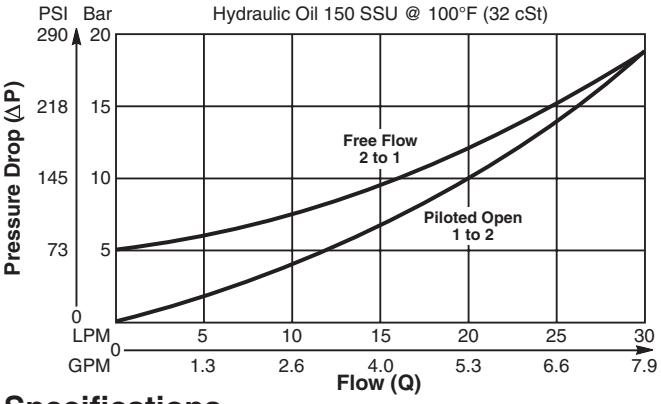

Specifications

Rated Flow	30 LPM (8 GPM)
Nominal Flow @ 7 Bar (100 PSI)	16 LPM (4.2 GPM) (Piloted Open)
Maximum Inlet Pressure	420 Bar (6000 PSI)
Leakage at 150 SSU (32 cSt)	Less than 3 drops/min.
Cracking Pressure	5 Bar (72 PSI)
Pilot Ratio	4:1
Cartridge Material	Steel operating parts, hardened steel poppet.
Operating Temp. Range/Seals	-40°C to +93.3°C (Nitrile, Buna-N) (-40°F to +200°F) -31.7°C to +121.1°C (Fluorocarbon) (-25°F to +250°F)
Fluid Compatibility/ Viscosity	Mineral-based or synthetic with lubricating properties at viscosities of 45 to 2000 SSU (6 to 420 cSt)
Filtration	ISO code 16/13, SAE Class 4 or better
Approx. Weight	.066 kg (.145 lbs.)
Cavity	53-1 (See BC Section for more details)

Dimensions Millimeters (Inches)

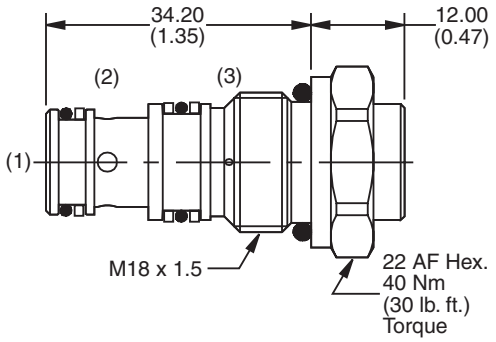

Ordering Information

D4A020	
Check Valve	Seals

Code	Seals / Kit No.
N	Nitrile, Buna-N / (SK30090N-1)
V	Fluorocarbon / (SK30090V-1)

Order Bodies Separately

LB10		
Line Body	Porting	Body Material

Code	Porting
310	3/8″ BSP (Main) 1/4″ BSP (Aux.)
318	3/8″ SAE (Main) 1/4″ SAE (Aux.)
312	3/8″ BSP Dual Cavity
319	3/8″ SAE Dual Cavity

Code	Body Material
A	Aluminum
S	Steel

General Description

Pilot to Open, Poppet Type Check Valve. For additional information see Technical Tips on pages CV1-CV4.

Features

- Hardened poppet for maximum durability
- High flow capacity
- Low leakage - less than 3 drops/min.
- Sealed pilot
- Good contamination tolerance
- Cavity commonality with load control valves
- Dual line blocks available
- All external parts zinc plated

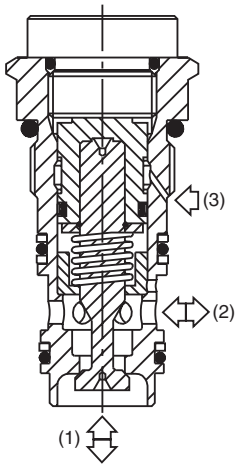

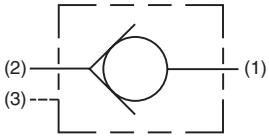

Performance Curve

Pressure Drop vs. Flow (Through cartridge only)

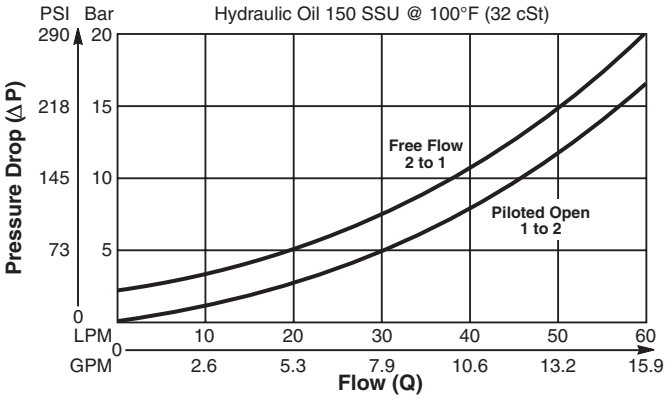

Specifications

Rated Flow	60 LPM (16 GPM)
Nominal Flow @ 7 Bar (100 PSI)	32 LPM (8.5 GPM) (Piloted Open)
Maximum Inlet Pressure	420 Bar (6000 PSI)
Leakage at 150 SSU (32 cSt)	Less than 3 drops/min.
Cracking Pressure	3 Bar (43.5 PSI)
Pilot Ratio	4:1
Cartridge Material	Steel operating parts, hardened steel poppet.
Operating Temp. Range/Seals	-40°C to +93.3°C (Nitrile, Buna-N) (-40°F to +200°F) -31.7°C to +121.1°C (Fluorocarbon) (-25°F to +250°F)
Fluid Compatibility/ Viscosity	Mineral-based or synthetic with lubricating properties at viscosities of 45 to 2000 SSU (6 to 420 cSt)
Filtration	ISO code 16/13, SAE Class 4 or better
Approx. Weight	.15 kg (.33 lbs.)
Cavity	68-1 (See BC Section for more details)

Dimensions Millimeters (Inches)

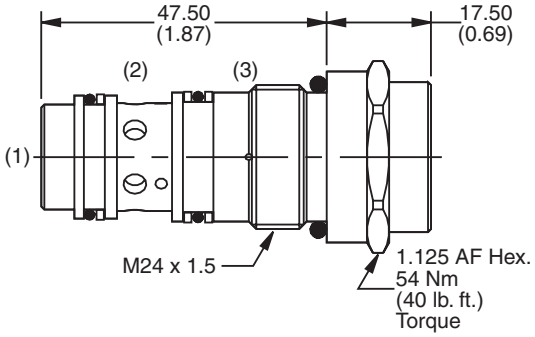

Ordering Information

D4A040	
Check Valve	Seals

Code	Seals / Kit No.
N	Nitrile, Buna-N / (SK30059N-1)
V	Fluorocarbon / (SK30059V-1)

Order Bodies Separately

LB10		
Line Body	Porting	Body Material

Code	Porting
251	1/2″ BSP (Main) 1/4″ BSP (Aux.)
253	1/2″ SAE (Main) 1/4″ SAE (Aux.)
259	1/2″ BSP Dual Cavity
261	1/2″ SAE Dual Cavity

Code	Body Material
A	Aluminum
S	Steel

General Description

Pilot to Open, Poppet Type Check Valve. For additional information see Technical Tips on pages CV1-CV4.

Features

- Hardened poppet for maximum durability
- High flow capacity
- Low leakage - less than 3 drops/min.
- Sealed pilot
- Good contamination tolerance
- Cavity commonality with load control valves
- Dual line blocks available
- All external parts zinc plated

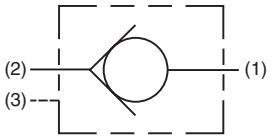

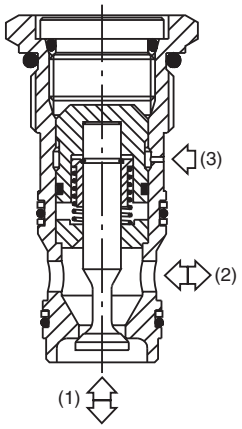

Performance Curve

Pressure Drop vs. Flow (Through cartridge only)

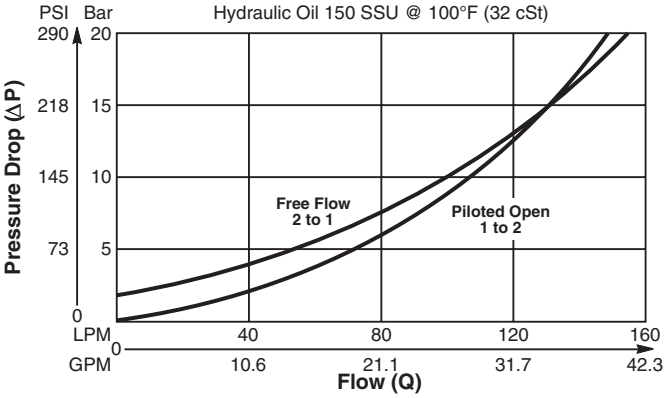

Specifications

Rated Flow	150 LPM (40 GPM)
Nominal Flow @ 7 Bar (100 PSI)	80 LPM (21 GPM) (Piloted Open)
Maximum Inlet Pressure	420 Bar (6000 PSI)
Leakage at 150 SSU (32 cSt)	Less than 3 drops/min.
Cracking Pressure	2 Bar (30 PSI)
Pilot Ratio	4:1
Cartridge Material	Steel operating parts, hardened steel poppet.
Operating Temp. Range/Seals	-40°C to +93.3°C (Nitrile, Buna-N) (-40°F to +200°F) -31.7°C to +121.1°C (Fluorocarbon) (-25°F to +250°F)
Fluid Compatibility/ Viscosity	Mineral-based or synthetic with lubricating properties at viscosities of 45 to 2000 SSU (6 to 420 cSt)
Filtration	ISO code 16/13, SAE Class 4 or better
Approx. Weight	.24 kg (.528 lbs.)
Cavity	3C (See BC Section for more details)

Dimensions Millimeters (Inches)

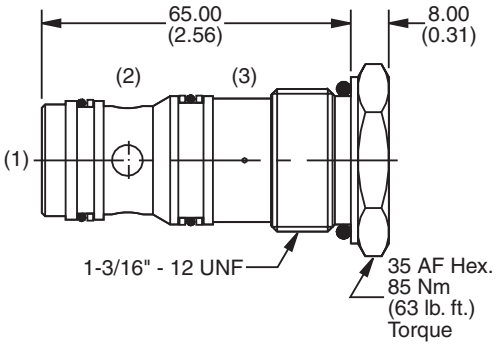

Ordering Information

D3B125	
Check Valve	Seals

Code	Seals / Kit No.
N	Nitrile, Buna-N / (SK30008N-1)
V	Fluorocarbon / (SK30008V-1)

Order Bodies Separately

LB10		
Line Body	Porting	Body Material

Code	Porting
039	3/4″ BSP (Main) 1/4″ BSP (Aux.)
069	1″ SAE (Main) 1/4″ SAE (Aux.)
034	3/4″ BSP Dual Cavity
234	3/4″ SAE Dual Cavity

Code	Body Material
A	Aluminum
S	Steel

General Description

Pilot to Close Check Valve. For additional information see Technical Tips on pages CV1-CV4.

Features

- Hardened, precision ground parts for durability
- Fully guided poppet for smooth operation
- All external parts zinc plated

Performance Curve

Pressure Drop vs. Flow (Through cartridge only)

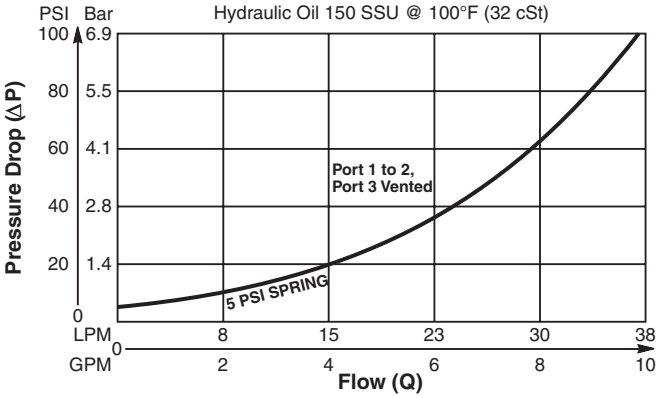

Specifications

Rated Flow	38 LPM (10 GPM)
Maximum Inlet Pressure	240 Bar (3500 PSI)
Leakage at 150 SSU (32 cSt)	15 drops/min. (.99 cc/min.) at 240 Bar (3500 PSI)
Pilot Ratio	2:1
Operating Temp. Range/Seals	-40°C to +93.3°C (Nitrile) (-40°F to +200°F) -31.7°C to +121.1°C (Fluorocarbon) (-25°F to +250°F)
Approx. Weight	.14 kg (0.31 lbs.)
Cavity	C10-3 (See BC Section for more details)
Form Tool	Rougher NFT10-3R Finisher NFT10-3F

Regeneration Circuit

(See Technical Tips Section)

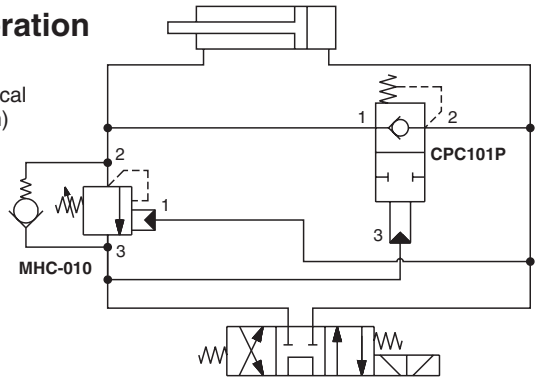

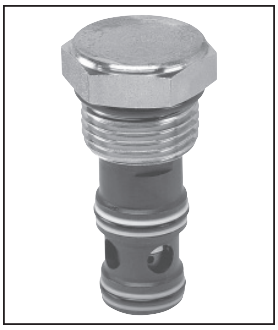

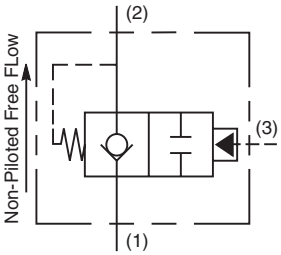

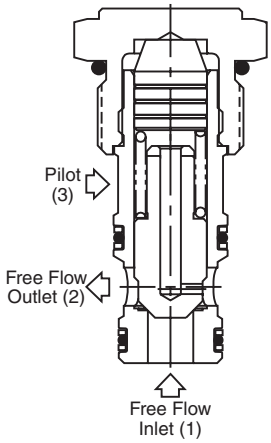

Dimensions Millimeters (Inches)

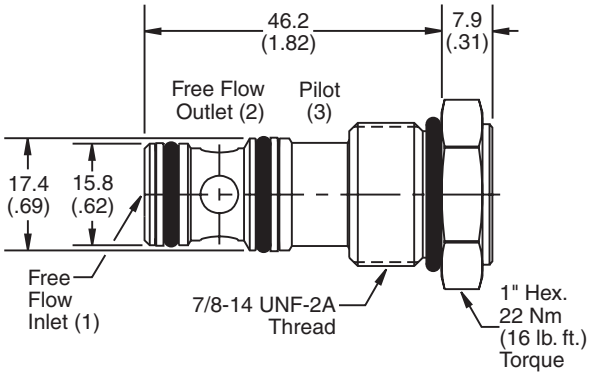

Ordering Information

CPC101P			—		
10 Size Pilot to Close Check Valve	Cracking Pressure	Seals		Body Material	Port Size

Code	Cracking Pressure
Omit	0.3 Bar (5 PSI)
50	3.5 Bar (50 PSI)

Code	Body Material
Omit	Steel
A	Aluminum

Code	Seals / Kit No.
Omit	Nitrile / (SK10-3)
V	Fluorocarbon / (SK10-3V)

Code	Port Size	Body Part No.
Omit	Cartridge Only	
4P	1/4″ NPTF	(B10-3-*4P)
6P	3/8″ NPTF	(B10-3-*6P)
8P	1/2″ NPTF	(B10-3-*8P)
6T	SAE-6	(B10-3-*6T)
8T	SAE-8	(B10-3-*8T)
6B	3/8″ BSPG	(B10-3-6B)†
8B	1/2″ BSPG	(B10-3-*8B)

** Add "A" for aluminum, omit for steel.*
† Steel body only.